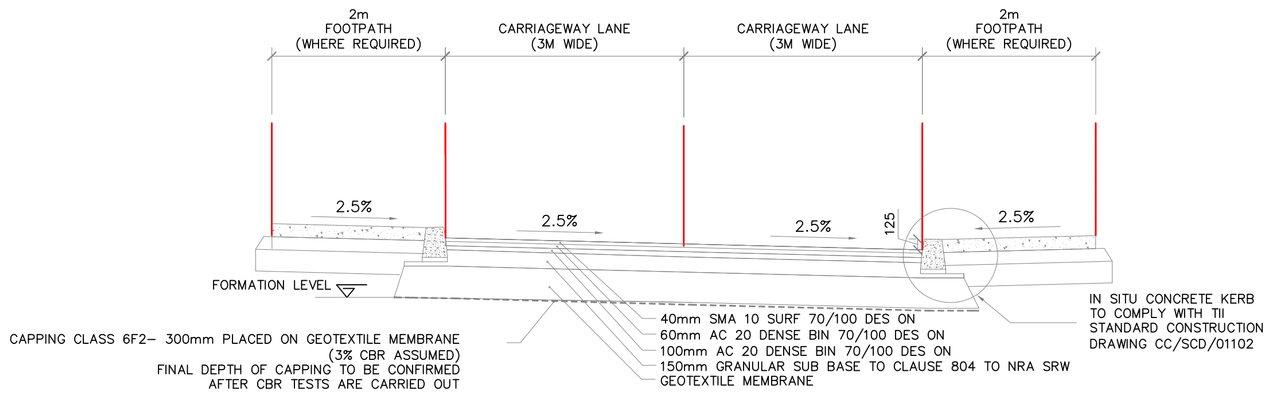

ROAD CONSTRUCTION DETAIL SECTION A - A

SCALE 1:50

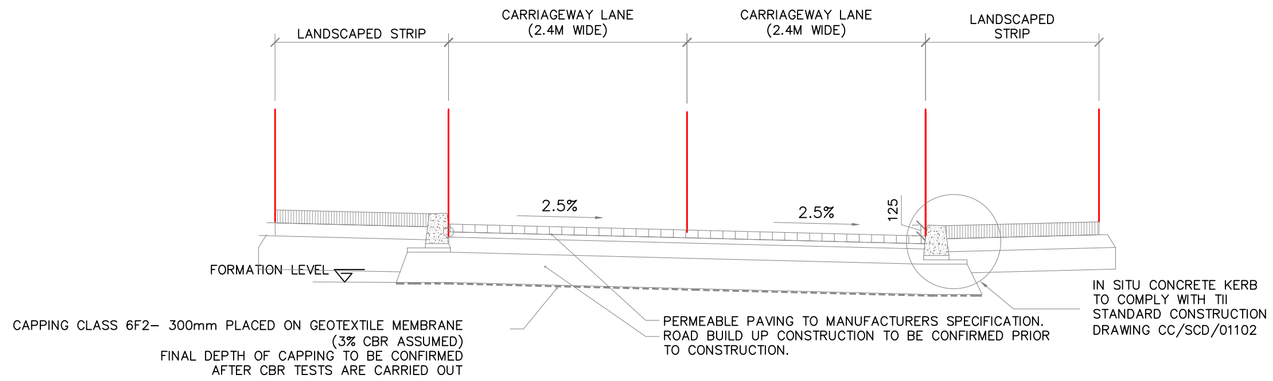

ROAD CONSTRUCTION DETAIL SECTION B - B

SCALE 1:50

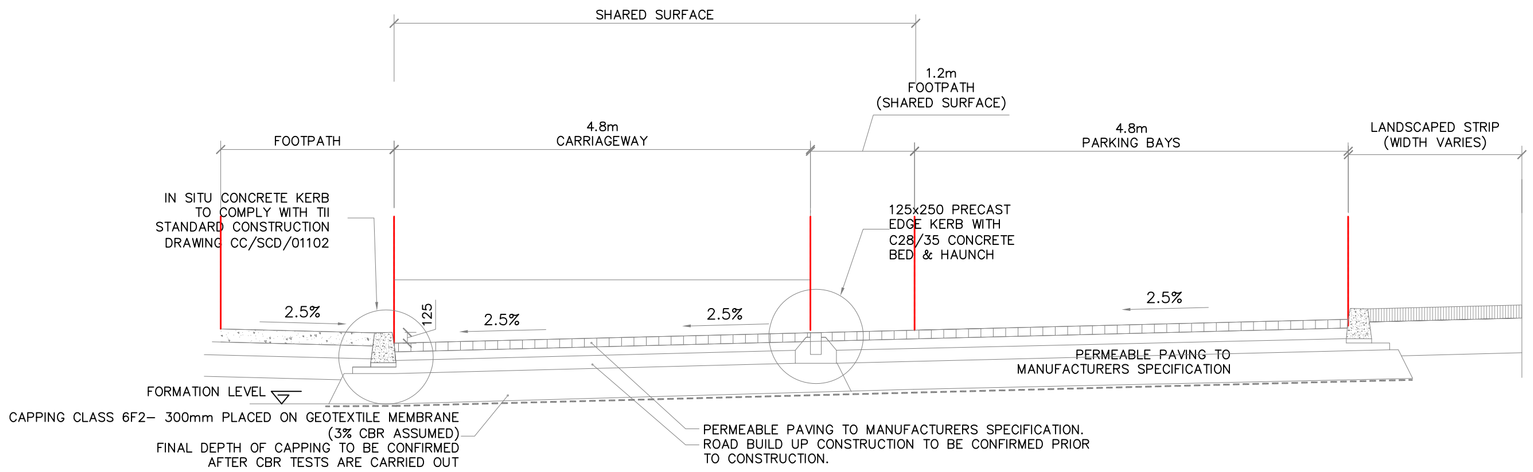

ROAD CONSTRUCTION DETAIL SECTION C -C

SCALE 1:50

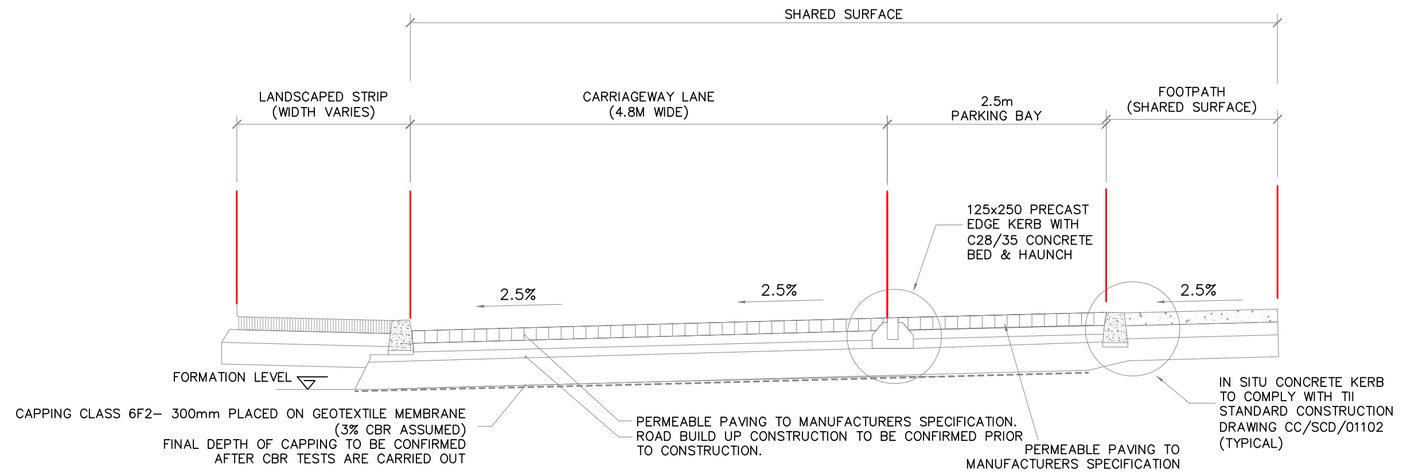

ROAD CONSTRUCTION DETAIL SECTION D - D

SCALE 1:50

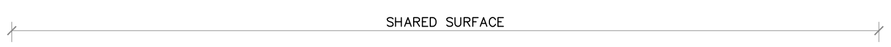

FOOTPATH CONSTRUCTION (TO RCD 1100/5 & AS DETAILED BELOW)
- 100mm SINGLE COURSE C28/35 SLAB ON
- 150mm SR21 STONE BLINDED WITH QUARRY SCREENINGS ON
- 250mm 6F1 CAPPING
- JOINTS EVERY 3.0m c/c
- JOINTS FORMED WITH DOUBLE THICKNESS OF BITUMINOUS ROOFING FELT TO I.S. 36 (TYPE 1F)
- ALL CONCRETE EDGES AND JOINTS SHALL BE BULLNOZED WITH A TROWEL
- CONCRETE SHALL BE FINISHED BY FLOATING WITH A WOODEN TROWEL & WHILE STILL GREEN LIGHTLY BRUSHED WITH A BASS BROOM TO PRODUCE A SLIGHT ROUGHNESS
- FOOTPATH TO BE DISHED AT ROAD CROSSING POINTS

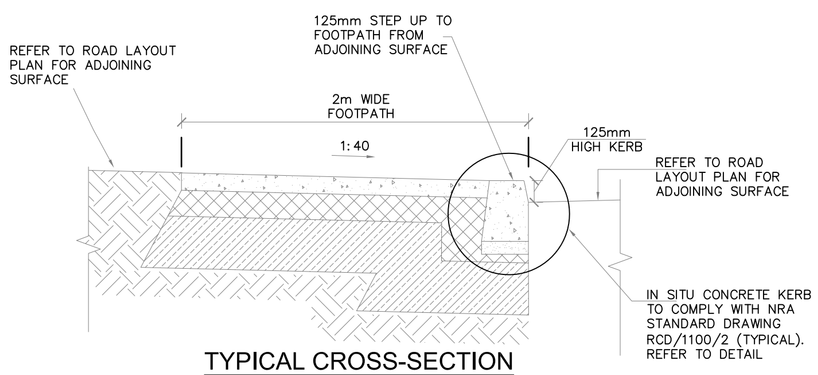

TYPICAL CROSS-SECTION THROUGH PROPOSED FOOTPATH

SCALE 1:25

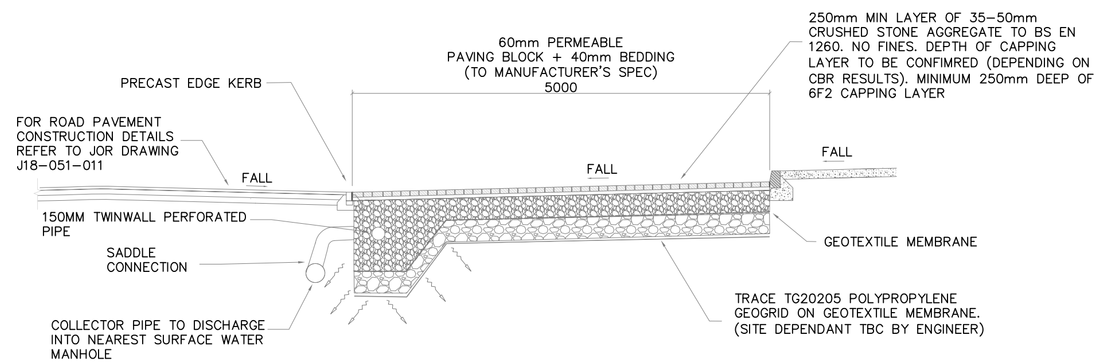

PERMEABLE PAVING CONSTRUCTION DETAIL

SCALE 1:50

ISSUED FOR
PLANNING

DIMENSIONS

Figured dimensions only to be taken from this drawing.
All dimensions to be checked on site.
Architects to be informed immediately of any discrepancies before work proceeds.

© COPYRIGHT

This drawing and any design hereon is copyright of JOR Consulting Engineers and must not be reproduced in whole or in part without their express written consent.

NOTES:
REFER TO ROAD HIERARCHY DRAWING FOR ROAD TYPE LOCATION

REV	DATE	DETAILS
C01	07/04/22	ISSUED FOR SHD APPLICATION

jor Joseph O'Reilly
Consulting Civil & Structural Engineers
Tel: 046 9077032 Fax: 046 9077932
Email: mail@jor.ie Web: www.jor.ie
Unit 1, St. Therese's Place, Flowerhill, Navan, Co. Meath

CLIENT
Eastwise Construction Swords Ltd

TITLE
Road Construction Details

PROJECT
Hartfield Place,
Swords Road, Whitehall,
Dublin 9, D09 C7F8

SCALE	DATE CREATED	DRAWN BY:	DOB
As Shown @ A1	Feb 2020	CHECKED BY:	MS

DRAWING No. **HARTPL-JOR-SM-ZZ-DR-C-0011**

REV **C01**